	?-?? Port name	?-???? - ???? Port size - Depth	?????? On delivery	????? N?m Tightening torque
A	? ? ? - ? Delivery port	SAE J518C High pressure (code 62) 1 1/4"	?????? Covered with tape	157
B	? ? ? - ? Suction port	SAE J518C Std. pressure (code 61) 2 1/2"	?????? Covered with tape	98
Dr	? ? ? ? - ? Drain port	1?1/16-12UN-2B-19 (ISO 11926-1:1995)	??????? Attached with steel plug	167
P_L	??????????? Load sensing port	7/16-20UNF-2B-14 (ISO 11926-1:1995)	??????? Attached with steel plug	12
Tair	?????-? Air bleeder port	7/16-20UNF-2B-14 (ISO 11926-1:1995)	??????? Attached with steel plug	12

? ?
Operating specifications

?????? Displacement	cm^3	140	
??????? Max. self-priming speed	min^{-1}	2200	(??? ??????) (C.clockwise viewed from shaft end)
? ? ? ? Rated pressure	MPa	32	
? - ? ? ? Peak pressure	MPa	35	
? ? ? ? ? Pump model name		K3VL140/B-1NLTM-L0/1-H1	

????? ????????

(1) ?????????????????????(???????)
(2) ?????????????????
(3) ??
(4) ?????????????????????? 0.1MPa ???
???? 0.4MPa ?? ??????????
(5) ?????????????????????????????? (????????) ?
(6) ?????????????? 0MPa ?? (??????????) ??????
(7) ?????????????????????????
(8) ???????? ????????NAS 1638 9?(ISO 4406 -/18/15)
????????????????????
(9) ?????????????150???? (100#m) ?????????-????????
(10) ?????????????10#m?????????????????
(11) ?????? : -20~95?C
(12) ??????? : 10~1000cSt(200~1000cSt?????????????????????)
(13) ?????????
????????????????????????????(fig.1)
??(??:1~2l/min)
(a)????????????????
1 ?????????????????????
(b)????????????????????? (fig.2)
1 ?????????????????????????????
2 ???

Notes on mounting and operation

(1) The pump shaft and flange surfaces should be cleaned. Remove an anti-rust material.
(2) Do not apply any form of axial loading to the pump shaft.
(3) The uppermost drain port should be used and the drain piping should be so connected as to keep the casing filled with oil.
(4) Keep the casing pressure below 0.1 MPa normally, and below 0.4 MPa at its peak.
(5) Make sure the drain piping led into the oiltank is kept below the surface of the oil (to prevent airation).
(6) Make sure the suction pressure in the suction flange is kept above 0 MPa normally.
(7) Mineral antiwear type hydraulic oil should be used.
(8) For satisfactory service life of the pump in application, the operating fluid should be continuously filtered to a minimum cleanliness level of NAS1638 class 9 or -/18/15 to ISO 4406.
(9) Provide a 150 mesh (100#m) strainer in the suction line.
(10) Install a 10#m filter in the return line.
(11) Allowable oil temperature range : -20~95?.
(12) Oil viscosity range : 10~1000cSt when 200~1000cSt, take warming up before real working.
(13) Caution for the vertical mounting.
The oil level in the tank should be upper than the pump mounting flange. (fig. 1)
If the oil level is lower than the pump level, forced lubrication should be made from the air bleeder port. (flow 1~2 l/min)
(a) Installation within a tank
① Open the drain port and the air bleeder port.
(b) Installation outside a tank (fig. 2)
① Pipe the drain port and the air bleeder port to tank.
② If the pipe for draining or air bleeding is upper than the oil level, it should be filled with oil before starting the pump.

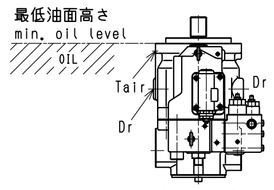

(fig. 1)

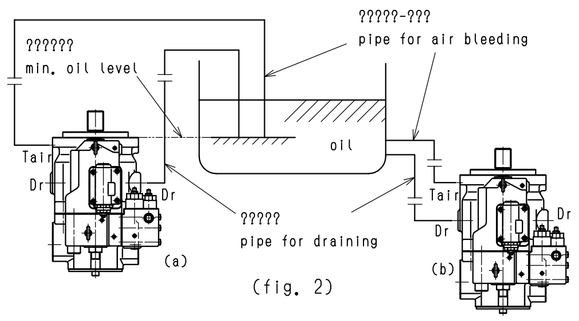

(fig. 2)

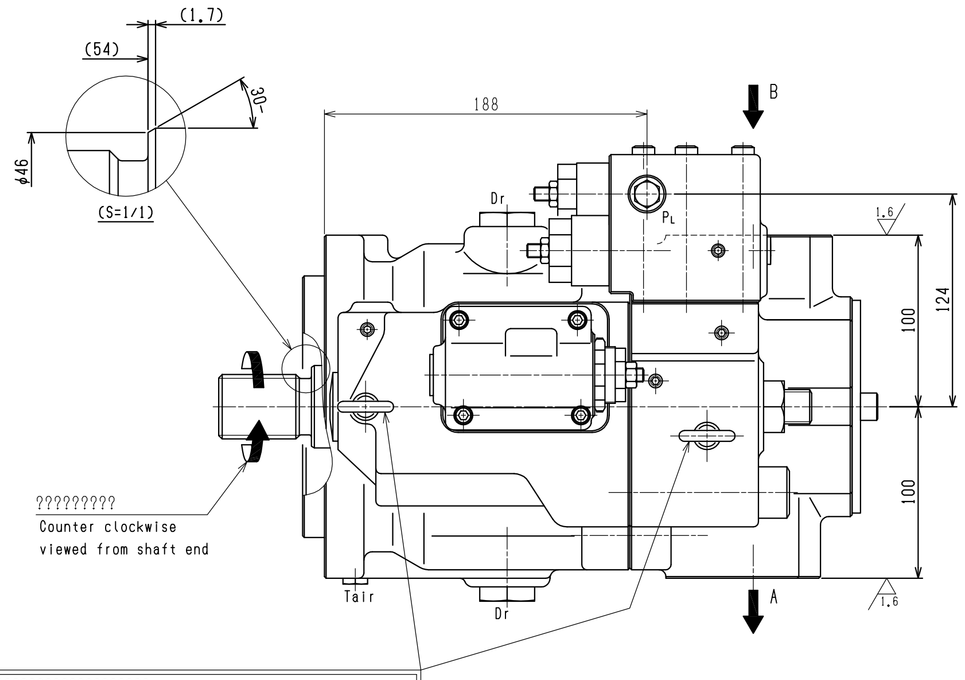

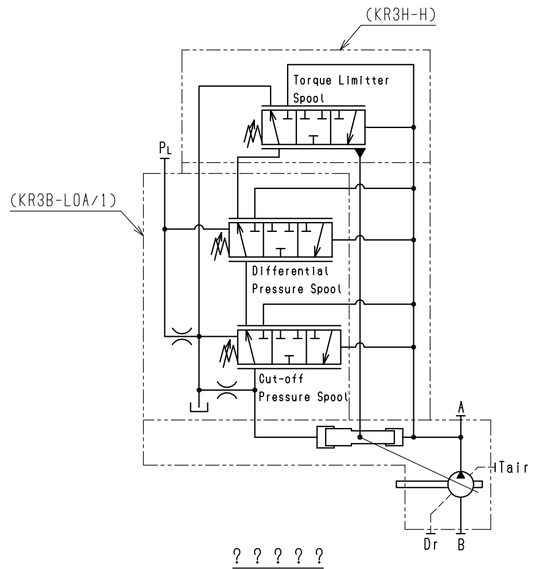

? ? ? ? ?
Hydraulic circuit

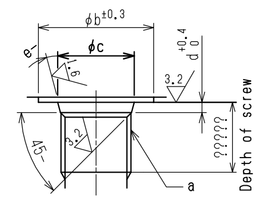

????? Detail of ports (ISO 11926-1:1995)

? ? Symbol \ Dimension ? ?	a	b	c	d	e
PL, Tair	7/16-20UNF-2B	21	$12.4^{+0.1}_{0}$	2.4	12
Dr	1?1/16-12UN-2B	41	$29.2^{+0.13}_{0}$	3.3	15

SAE?????-??????????
Particulars of involute spline to SAE

? ? Number of teeth		17	?????? Tooth surface roughness		3.2
???????? Standard pitch circle diameter		35.984	? ? Type of fit		????? Side fit
? Tooth profile	? ?	?????-? Flat root	? Tooth thickness	? ? Class	1 ???? 1 Fit
? Tooth	?????????? Diametral pitch	12/24		?-????? Measurement over pins	41.905 ~41.949
? Tooth	? ? ? Pressure angle	30°		? ? ? Measurement pins	φ4.064
? ? ? ? Root diameter		33.012 ~33.343	? ? Rule		SAE

???????????????????????
????????????????????
(??????:22??80kg)
Do not attach heavy objects to the pump when the pump is lifted.Use two eye bolts when the pump is lifted.
(Max. allowable weight. 80kg using two eye bolts.)

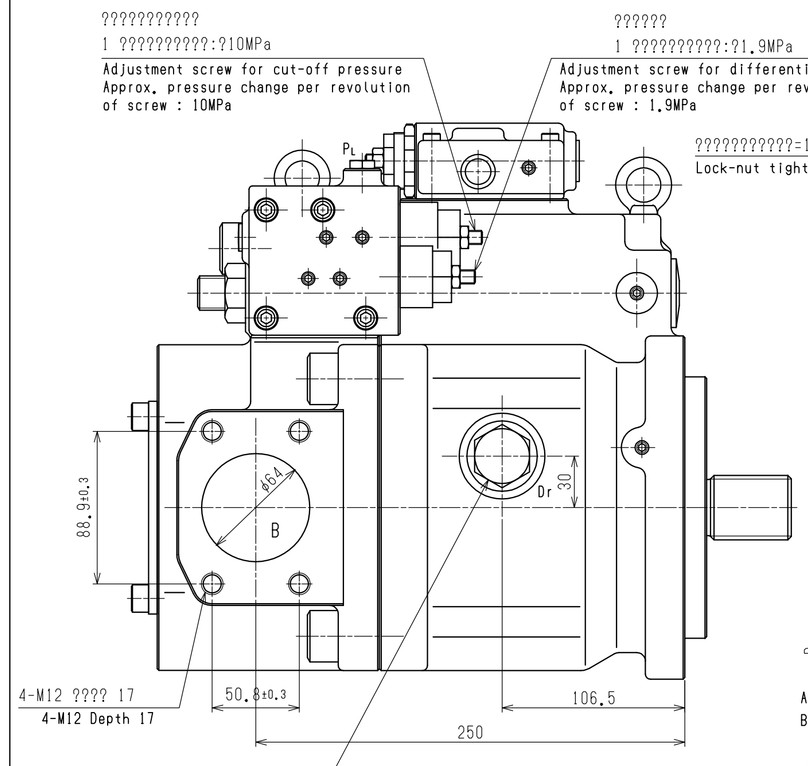

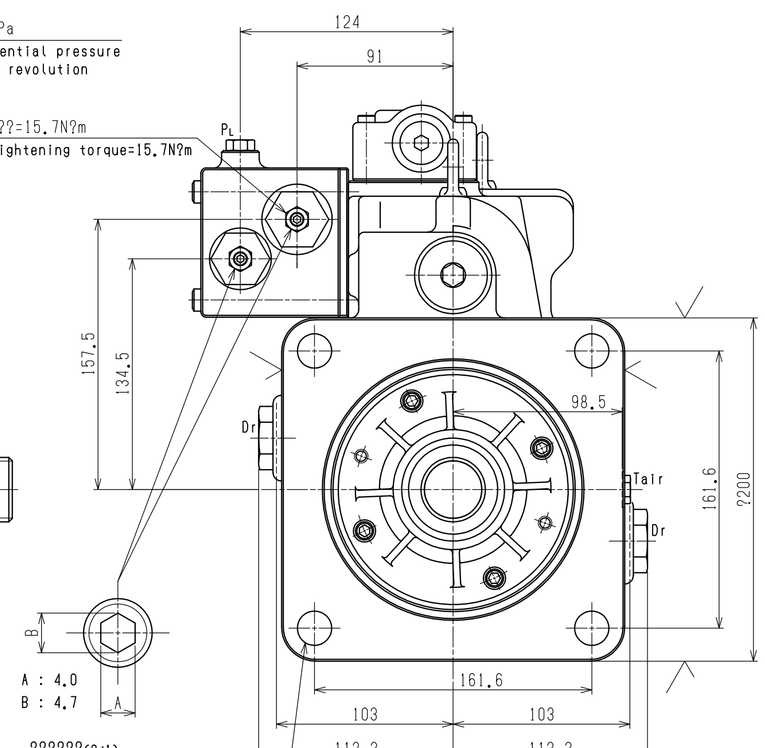

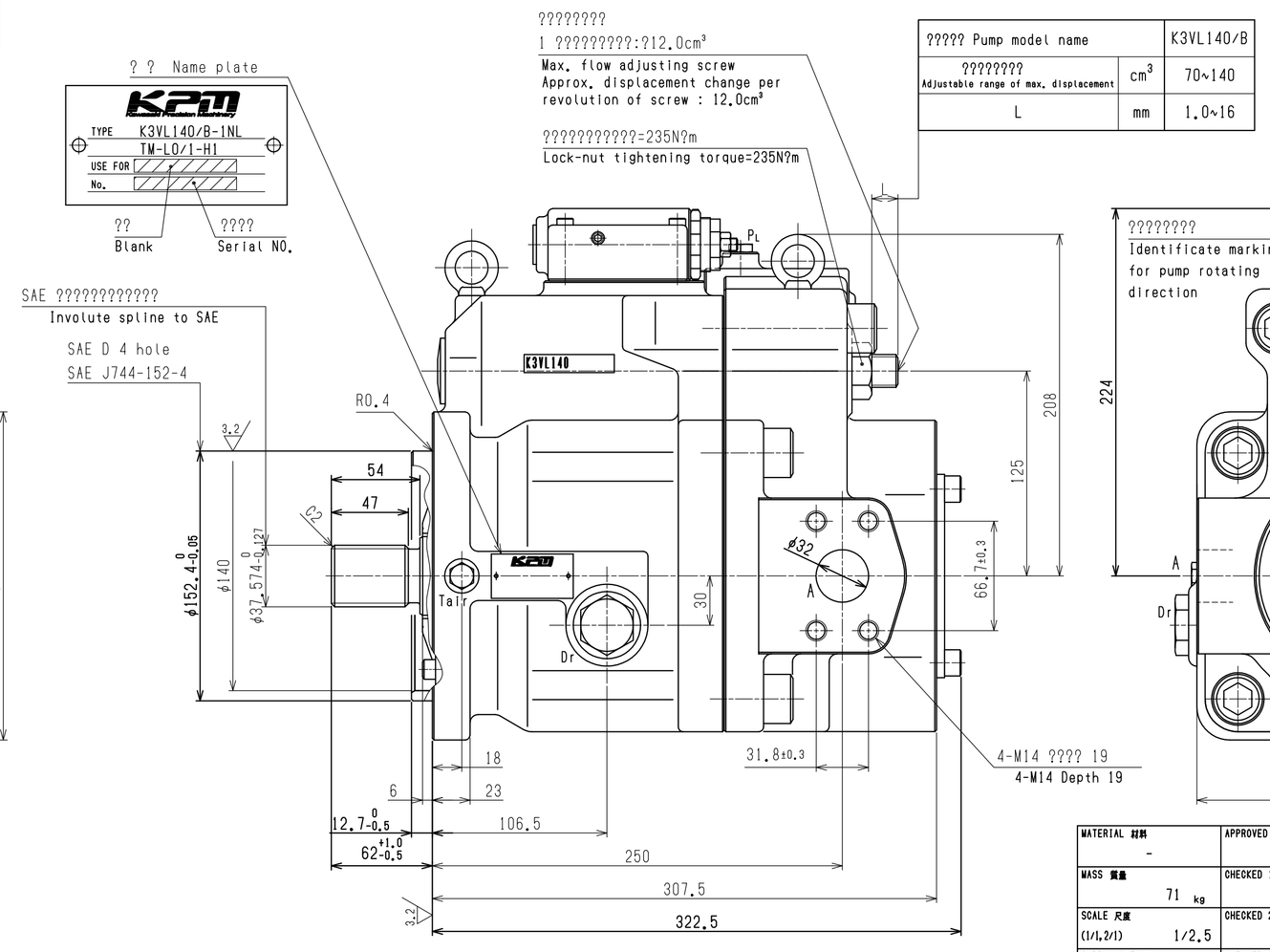

????? Pump model name		K3VL140/B
???????? Adjustable range of max. displacement	cm^3	70~140
L	mm	1.0~16

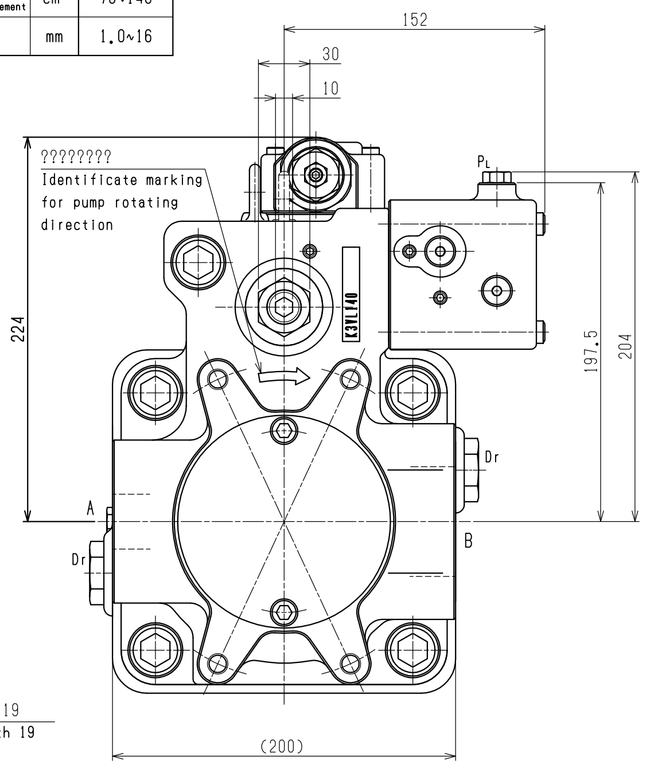

MATERIAL 材料 -	APPROVED 承認 松田(憲)	PRODUCT CODE 製品コード 29	JOB NO. 製番番号 / RULE 規格
MASS 質量 71 kg	CHECKED 1 検図1 後藤	K3VL140/B-1NLTM-L0/1-H1	
SCALE 尺度 (1/1,2/1) 1/2.5	CHECKED 2 検図2 杣友		
3 RD ANGLE 3角法 PROJECTION	CHECKED 3 検図3 -	外形寸法図 INSTALLATION DIMENSIONS	
DATE 作成日 May.12,2009	DRAWN 製図 堀江/神吉	PART NO. 品名番号	DWG.NO. 図面番号 02430-6528

出図先

2 号 原 紙 (A1)

Kawasaki Precision Machinery Ltd.