	Port name	Port size	On delivery	Tightening torque N·m
A	Delivery port	SAE J518C High pressure (code 62) 3"	Covered with tape	235
B	Suction port	SAE J518C Std. pressure (code 61) 1-1/2"	Covered with tape	235
D_r	Drain port	SAE J1926/1 Straight thread O-Ring boss 3/4" O. D Tube 1-1/16-12UN-2B	Attached with steel plug	167
P_L	Load sensing port (Type L0,L1)	SAE J1926/1 Straight thread O-Ring boss 1/4" O. D Tube 7/16-20UNF-2B	Attached with steel plug	12
P_C	Pressure control port (Type PO)			
T_{air}	Air bleeder port	SAE J1926/1 Straight thread O-Ring boss 1/4" O. D Tube 7/16-20UNF-2B	Attached with steel plug	12

Operating specifications

Displacement	cm^3	200
Max. self priming speed	min^{-1}	1900 (Clockwise viewed from shaft and)
Rated pressure	MPa	32
Peak pressure	MPa	35
Pump model name		K3VL200/B-$1^{S}_{N}{}^{SS}_{KW}{}^{LO}_{L1}$/1-＊＊

Notes on mounting and operation

(1) The pump shaft and flange surfaces should be cleaned. Remove an anti-rust material.
(2) Do not apply any form of axial loading to the pump shaft.
(3) The uppermost drain port should be used and the drain piping should be so connected as to keep the casing filled with oil.
(4) Keep the casing pressure below 1 bar (14 psi) normally, and below 4 bar (58 psi) at its peak.
(5) Make sure the drain piping led into the oiltank is kept below the surface of the oil (to prevent aeration).
(6) Make sure the suction pressure in the suction flange is kept above 0 bar (0 psi) normally.
(7) Mineral antiwear type hydraulic oil should be used.
(8) For satisfactory service life of the pump in application, the operating fluid should be continuously filtered to a minimum cleanliness level of NAS1638 class 9 or 18/15 to ISO/DIS 4406.
(9) Provide a 150 mesh (100μm) strainer in the suction line.
(10) Install a 10μm filter in the return line.
(11) Allowable oil temperature range : -20～95℃.
(12) Oil viscosity range : 10～1000cSt when 200～1000cSt, take warming up before real working.
(13) Caution for the vertical mounting.
The oil level in the tank should be upper than the pump mounting flange. (fig. 1)
If the oil level is lower than the pump level, forced lubrication should be made from the air bleeder port. (flow 1～2 l/min)
(a) Installation within a tank
① Open the drain port and the air bleeder port.
(b) Installation outside a tank (fig. 2)
① Pipe the drain port and the air bleeder port to tank.
② If the pipe for draining or air bleeding is upper than the oil level, it should be filled with oil before starting the pump.

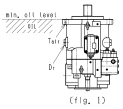

(fig. 1)

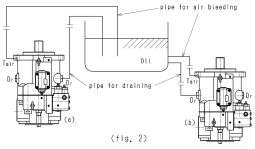

(fig. 2)

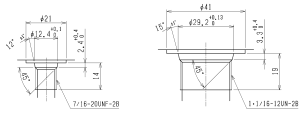

Detail of P_L (P_C), T_{air} ports (1/1)
Detail of D_r ports (1/1)

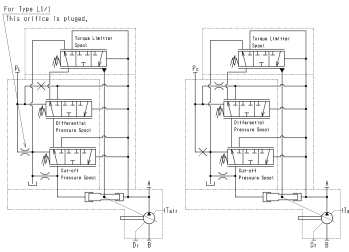

Hydraulic circuit (Type L0/1, L1/1)
Hydraulic circuit (Type PO/1)

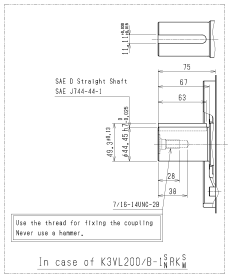

In case of K3VL200/B-$1^{S}_{N}RK^{S}_{W}$

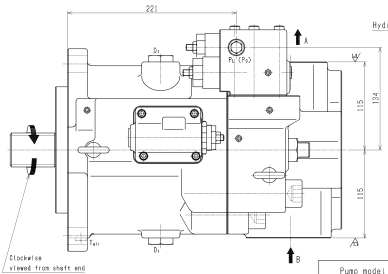

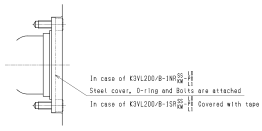

Section X-X

Pump model name		K3VL200/B
Adjustable range of max. displacement	cm^3	100～200
L	mm	15.8～25.9

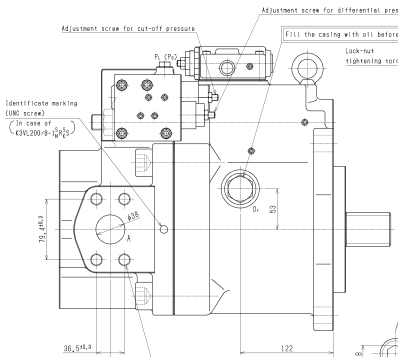

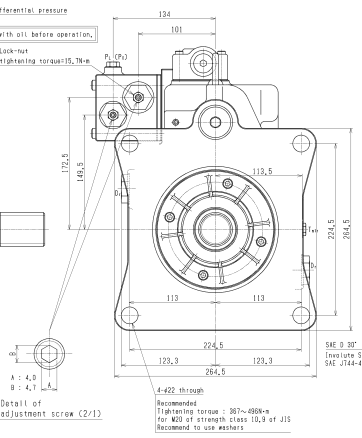

Detail of adjustment screw (2/1)

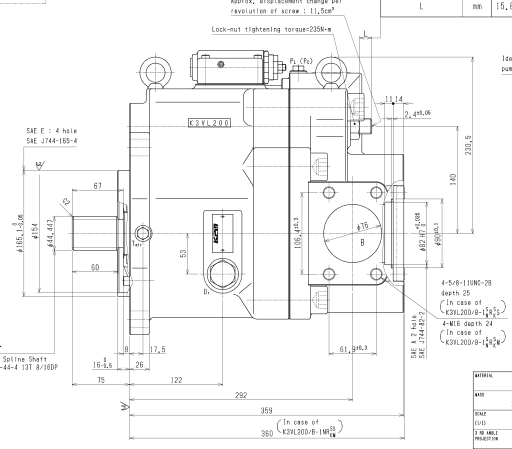

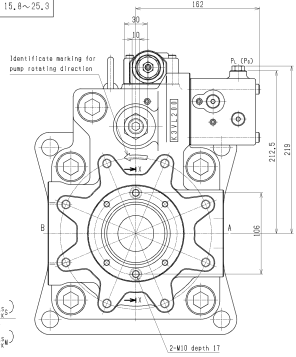

MATERIAL	APPROVED M.Shoishi	PRODUCT CODE	JOB NO.
MASS 105 kg	CHECKED 1 -		
SCALE (1/1) 1/2.5	CHECKED 2 T.Yoshimura	K3VL200/B-$1^{S}_{N}{}^{SS}_{KW}{}^{LO}_{L1}$/1-＊＊	
3rd ANGLE PROJECTION	CHECKED 3 Y.Mita	INSTALLATION DIMENSIONS	
DATE Sep.10.2005	DRAWN Y.Mita	PART NO.	ENG.NO. 02430-4698

Kawasaki Precision Machinery Ltd.

(A1)